MB32
Moisture Analyzers

Perfect for Routine Moisture Testing

The new OHAUS MB32 features a redesigned housing with stronger material, innovative carbon fiber IR heating technology and an upgraded load cell for enhanced durability and performance. The easy-to-use MB32 is the perfect choice for routine moisture testing.

Unique Features:

- An LCD with second line display, navigation knob, and intuitive operation system makes for convenient routine moisture testing.
- The new carbon fiber IR heating technology and upgraded loadcell shortens analysis time, saves power and keeps results accurate and consistent.
- Robust, slim design with a strong housing ensures MB32's durability even in harsh environments.

MB32 *Moisture Analyzers*

Specifications

Model	MB32
Readability	0.01 % / 0.001 g
Repeatability	0.15 % (3 g sample) 0.02 % (10 g sample)
Moisture Range	0.01 % to 100 % (0.01 % to 1000 % in regain mode)
Recommended MC%	0.5 % to 100 %
Minimum Start Weight	0.5 g
Capacity	90 g
Heating Element	Carbon Fiber IR
Temperature Range	40-180 °C (1 °C incremental)
Drying Programs	Standard, Fast
Method Library	2
Result Storage	1
Switch-off Criteria	3 automatic, timed (1 - 480mins), manual
ID Management	-
Status Light	-
Operation Instruction	Progress indicator On-screen instruction
Display Type	4" LCD with 2nd line display
Display Results	MC%, DC%, RG%, time, temperature, weight, Method No.
Language	English, French, German, Italian, Spanish, Portuguese, Chinese, Korean, Japanese, Polish, Turkish
Adjustment	Temperature adjustment (100 °C, 160 °C) External weight adjustment (50 g)
Output	RS232, USB device
Power	120 or 240VAC 50/60 Hz
Operating Temperature Range	10 °C - 40 °C
Pan Size	Ø 90 mm
Dimension	210 x 138 x 352 mm
Net Weight	4.3 kg
Shipping Weight	6.1 kg

Compliance

- **Product Safety:** IEC/EN 61010-1; IEC/EN 61010-2-010; CAN/CSA C22.2 61010-1; CAN/CSA C22.2 61010-2-010; UL 61010-1; UL 61010-2-010
- **Electromagnetic Compatibility:** IEC/EN 61326-1 Class B, Basic environments; FCC Part 15 Class A; Canada ICES-003 Class A
- **Compliance Marks:** CSA; CE; RCM; WEEE

Accessories

Pan Handler, MB32 MB62 MB92 30954234
In-Use Cover, MB32 MB62 30954235
Temperature Calibration Kit 11113857
Scoop 30284477
Aluminum Pan (50) 30585411
Filter Glass Fiber Set (100) 31087438
Cage, Sample 80252477
Reusable Pan, Set (3), 7 mm 80252478
Reusable Pan, Set (3), 14 mm 80252479
SF40A Impact Printer 30045641
Bluetooth Printer, Impact, SF40A/BT 30944358
Protective Glass Kit, MB32 MB62 MB92 31045693
Carrying case, MB32 MB62 MB92 31035939

Outline Dimensions

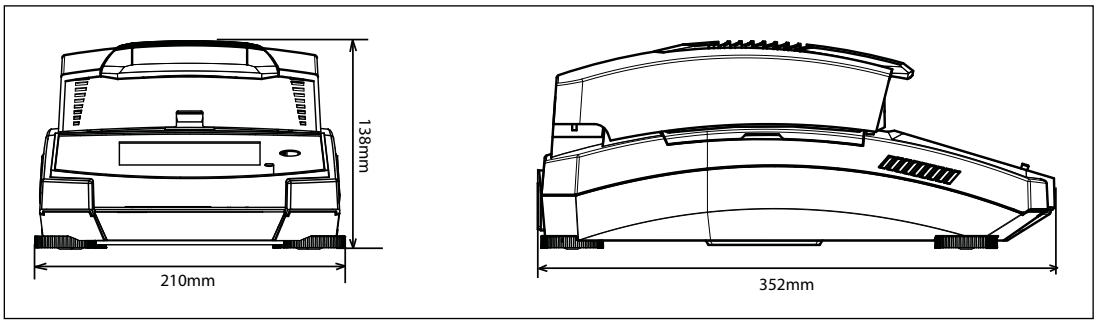

80776948_B 20260128 © Copyright OHAUS Corporation

OHAUS Asia/Pacific Headquarters

e-mail: APmarketing@ohaus.com
Tel: +86 21 64855408

With offices throughout Europe, Asia, and Latin America

* ISO 9001:2015

Registered Quality Management System

OHAUS®